TSH22

HIGH PERFORMANCE
DUAL BIPOLAR OPERATINAL AMPLIFIER

- HIGH GAIN BANDWIDTH PRODUCT : **25MHz**
- HIGH SLEW RATE : **15V/µs**
- SINGLE OR DUAL SUPPLY OPERATION : **3V TO 30V** (±1.5V to ±15V)
- LOW VOLTAGE NOISE : **14nV/√Hz**
- NO PHASE INVERSION
- ESD TOLERANCE : 2kV
- LATCH-UP IMMUNITY
- **SPICE MACROMODEL** INCLUDED IN THIS SPECIFICATION

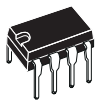

N
DIP8
(Plastic Package)

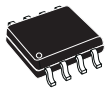

D
SO8
(Plastic Micropackage)

DESCRIPTION

TheTSH22 is a dual bipolar operational amplifier offering a single supply operation from 3V to 30V with very good performances : medium speed (25MHz), unity gain stability and low noise.

The TSH22 is therefore an enhanced replacement of standard dual operational amplifiers.

ORDER CODE

Part Number	Temperature Range	Package	
		N	D
TSH22I	-40°C, +125°C	•	•

N = Dual in Line Package (DIP)
D = Small Outline Package (SO) - also available in Tape & Reel (DT)

PIN CONNECTIONS (top view)

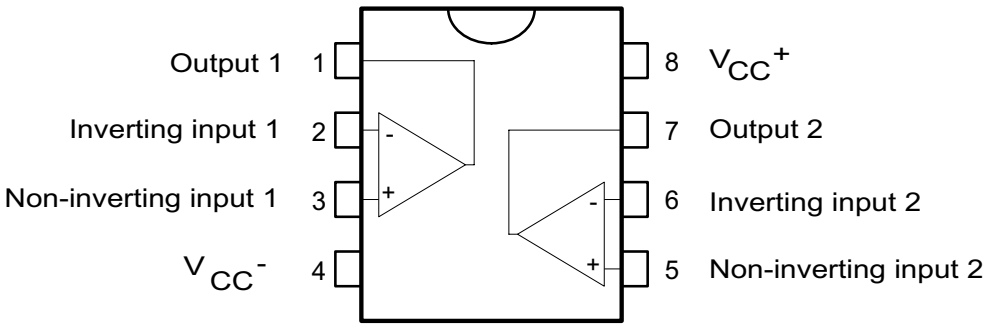

SCHEMATIC DIAGRAM (1/2 TSH22)

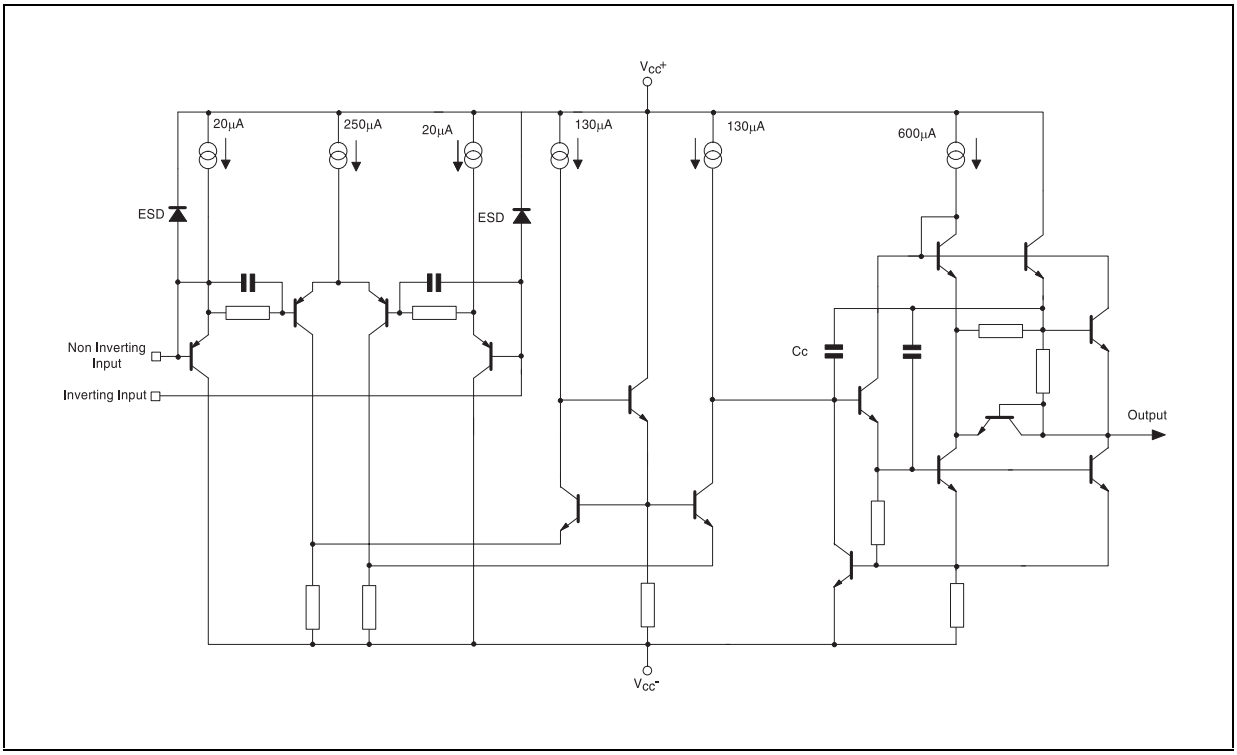

ABSOLUTE MAXIMUM RATINGS

Symbol	Parameter	Value	Unit
V_{CC}	Supply Voltage	±18 to 36	V
V_{id}	Differential Input Voltage [1)]	±36	V
V_i	Input Voltage (see note 1)	±18	V
	Output Short-circuit Duration [2)]	Infinite	
T_{oper}	Operating Free-Air Temperature Range	-40 to +125	°C
T_j	Maximum Junction Temperature	+150	°C
T_{stg}	Storage Temperature Range	-65 to +150	°C
p_{tot}	Maximum Power Dissipation (see note 2)	500	mW

1. Either or both input voltages must not exceed the magnitude of V_{CC}^+ or V_{CC}^-
2. Power dissipation must be considered to ensure maximum junction temperature (T_j) is not exceeded

OPERATING CONDITIONS

Symbol	Parameter	Value	Unit
V_{CC}	Supply Voltage	3 to 30	V

ELECTRICAL CHARACTERISTICS

V_{CC}^{+} = 15V, V_{cc}^{-} = -15V, T_{amb} = 25°C (unless otherwise specified)

Symbol	Parameter	Min.	Typ.	Max.	Unit
V_{io}	Input Offset Voltage (V_{ic} = 0V, V_o = 0V) Vcc^+ = +15V, Vcc^- = -15V $T_{min} \le T_{amb} \le T_{max}$ Vcc^+ = +5V, Vcc^- = 0V			 2.5 3.5 2.5	mV
ΔV_{io}	Input Offset Voltage Drift (V_{ic} = 0V, V_o = 0V)		2		µV/°C
Iio	Input Offset Current (V_{ic} = 0V, V_o = 0V)		3	65	nA
I_{ib}	Input Bias Current (V_{ic} = 0V, V_o = 0V)		100	650	nA
Vicm	Common Mode Input Voltage Range		Vcc^- to Vcc^+-1.8V		V
A_{vd}	Large Signal Voltage Gain (R_L = 2kΩ, Vo = 0V to +10V $T_{min} \le T_{amb} \le T_{max}$	32 20	100		V/mV
$\pm V_{opp}$	Output Voltage Swing (Vid = ±1V) Vcc^+ = +15V, Vcc^- = -15V R_L = 2kΩ V_{OH} V_{OL} R_L =10kΩ V_{OH} V_{OL} Vcc^+=+5V, Vcc^-=0V R_L = 2kΩ V_{OH} V_{OL}	 13.4 13.4 3.7	 13.9 -13.9 14 -14.7 0.15	 -13.5 -14.1 0.2	V
I_o	Output Short Circuit Current (V_{id} = ±1V, V_o = 0V) Source Sink	 25 25	 37 37		mA
CMR	Common Mode Rejection Ratio (V_{ic} = -15V to +13.2V)	80	100		dB
SVR	Supply Voltage Rejection Ratio Vcc^+/Vcc^- = +15V/-15V to +5V/-5V	90	105		dB
I_{cc}	Supply Current (V_o = 0V, no load, each amplifier) Vcc^+ = +15V, Vcc^- = -15V $T_{min} \le T_{amb} \le T_{max}$ Vcc^+=+5V, Vcc^-=0V		2.15	 2.75 3 2.75	mA
SR	Slew Rate (V_i = -10V to +10V, C_L = 100pF, R_L = 2kΩ, A_V = +1)	8	15		V/µs
GBP	Gain Bandwith Product (f = 100kHz, R_L = 2kΩ, C_L = 100pF)	17	25		MHz
B	Unity Gain Bandwith (Open loop)		5		MHz
∅m	Phase Margin R_L = 2kΩ R_L = 2kΩ, C_L = 100pF		50 40		Degrees
e_n	Equivalent Input Noise Voltage (R_S = 100Ω, f = 1kHz)		14		$\frac{nV}{\sqrt{Hz}}$
V_{o1}/V_{o2}	Channel Separation (f = 20Hz to 20kHz)		120		dB
THD	Total Harmonic Distortion (V_{cc} = ±15V, f = 1kHz, A_{VCL} = 20dB, R_L = 600Ω, V_o = 3Vrms)		0.003		%

MACROMODEL

```
** Standard Linear Ics Macromodels, 1993.
CONNECTIONS :
* 1 INVERTING INPUT
* 2 NON-INVERTING INPUT
* 3 OUTPUT
* 4 POSITIVE POWER SUPPLY
* 5 NEGATIVE POWER SUPPLY
.SUBCKT TSH22 1 3 2 4 5 (analog)
*******************************************************
*
.MODEL MDTH D IS=1E-8 KF=7.976636E-15 CJO=10F
* INPUT STAGE
CIP 2 5 1.200000E-11
CIN 1 5 1.200000E-11
EIP 10 5 2 5 1
EIN 16 5 1 5 1
RIP 10 11 1.083333E+00
RIN 15 16 1.083333E+00
RIS 11 15 8.942641E+00
DIP 11 12 MDTH 400E-12
DIN 15 14 MDTH 400E-12
VOFP 12 13 DC 0
VOFN 13 14 DC 0
IPOL 13 5 2.400000E-04
CPS 11 15 10.5E-09
DINN 17 13 MDTH 400E-12
VIN 17 5 -0.200000e+00
DINR 15 18 MDTH 400E-12
VIP 4 18 1.800000E+00
FCP 4 5 VOFP 7.750000E+00
FCN 5 4 VOFN 7.750000E+00
FIBP 2 5 VOFN 5.000000E-04
FIBN 5 1 VOFP 5.000000E-04
* AMPLIFYING STAGE
FIP 5 19 VOFP 6.708333E+02
FIN 5 19 VOFN 6.708333E+02
GVNEG 5 19 5 13 1.395908E-05
GVPOS 5 19 4 13 1.395908E-05
RG1 19 5 8.056996E+04
RG2 19 4 8.056996E+04
CC 19 29 1.100000E-08
HZTP 30 29 VOFP 6.545046E+01
HZTN  5 30 VOFN 6.545046E+01
DOPM 19 22 MDTH 400E-12
DONM 21 19 MDTH 400E-12
HOPM 22 28 VOUT 4.054054E+03
VIPM 28 4 1.500000E+02
HONM 21 27 VOUT 4.054054E+03
VINM 5 27 1.500000E+02
RPM1 5 80 1E+06
RPM2 4 80 1E+06
GAVPH 5 82 19 80 6.00E-07
RAVPHGH 82 4 3333222
RAVPHGB 82 5 3333222
RAVPHDH 82 83 1000000
RAVPHDB 82 84 1000000
CAVPHH 4 83 0.12243E-12
CAVPHB 5 84 0.12243E-12
EOUT 26 23 82 5 1
VOUT 23 5 0
ROUT 26 3 2.472597E+01
COUT 3 5 1.000000E-12
DOP 19 25 MDTH 400E-12
VOP 4 25 1.824860E+00
DON 24 19 MDTH 400E-12
VON 24 5 1.824860E+00
.ENDS
```

ELECTRICAL CHARACTERISTICS

V_{cc} = ±15V, T_{amb} = 25°C (unless otherwise specified)

Symbol	Conditions	Value	Unit
V_{id}		0	mV
A_{vd}	R_L = 2kΩ	100	dB
I_{cc}	No load, per operator	2	mA
Vicm		-15.2 to 13.8	V
V_{OH}	R_L = 2kΩ	+13.9	V
V_{OL}	R_L = 2kΩ	-13.9	V
I_{sink}	V_o = 0V	40	mA
I_{source}	V_o = 0V	40	mA
GBP	R_L = 2kΩ, C_L = 100pF	34	MHz
SR	R_L = 2kΩ, C_L = 100pF	10	V/µs
∅m	R_L = 2kΩ, C_L = 100pF	36	Degrees
∅m	R_L = 2kΩ, C_L = 300pF	26	Degrees

APPLICATIONS INFORMATION

TSH22 IN COMPARATOR APPLICATION

The TSH22 is a dual high performances operational amplifier featuring speed of 30MHz and single supply operation from 3V to 30V.

Most of operational amplifiers are not suited for comparator use because of low transition speed, output signal incompatible with standard logics level and mainly, phase inversion.

The phase inversion occures when a strong differential signal is applied to the device inputs. The output level is then inverted and shows a wrong logic state. TSH22 does not present this problematic behaviour.

Displayed curves below show the device response in standard comparator configuration without external components.

Transition speed : Typical transition speed under a single 5V supply voltage is about 2µs from 50mV overdrive. V_{OH} min. is 3.7V and V_{OL} max. is 0.2V (2kΩ load) making it compatible with standard logic families.

Figures 3 & 4 show output signal transition for a 50mV and 250mV input signal overdrive respectively of 3µs and 1µs.

Figure 1 : Basic comparator application

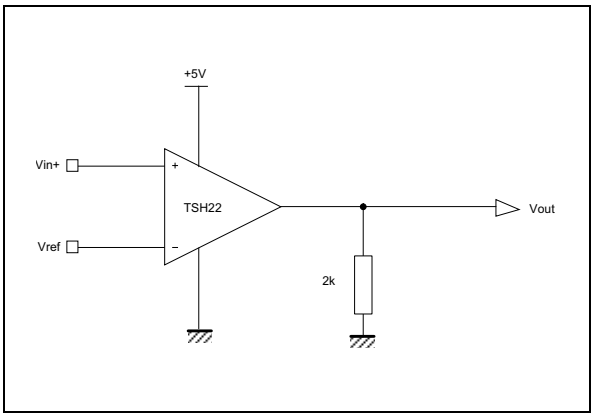

Figure 2 : Operating conditions

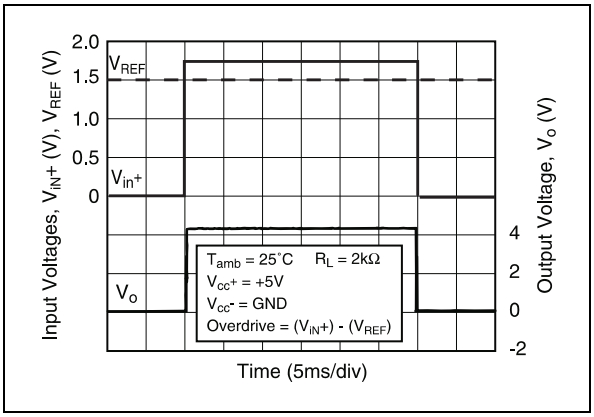

Figure 3 : Transition speed@ 50mV overdrive

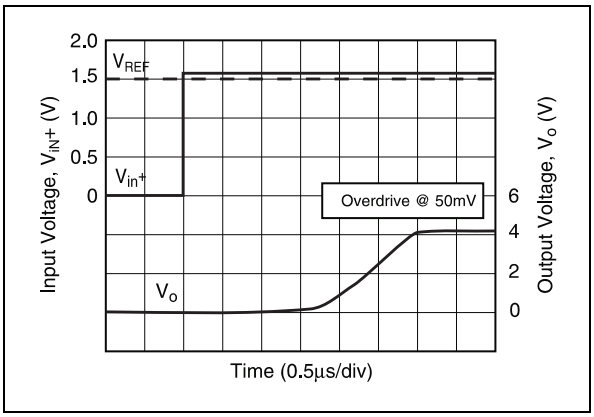

Figure 4 : Transition speed@ 250mV overdrive

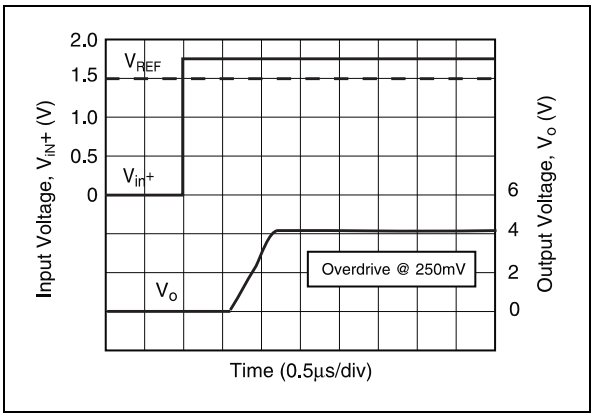

PHASE INVERSION

At high differential input voltage, the TSH22 keeps the right output level thanks to its specific input structures.

The advantage is obvious on the following figures and can be also an advantage in linear use when saturation might occure.

Figure 5 & 6 show the behaviour in follower stage with saturation output of TSH22 versus 15MHz standard operational amplifier.

Figure 5 : Behaviour with TSH22

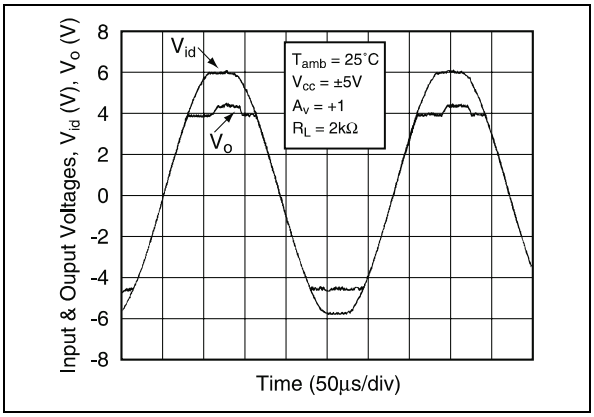

Figure 6 : Saturation behaviour with 15MHz standard operational amplifier

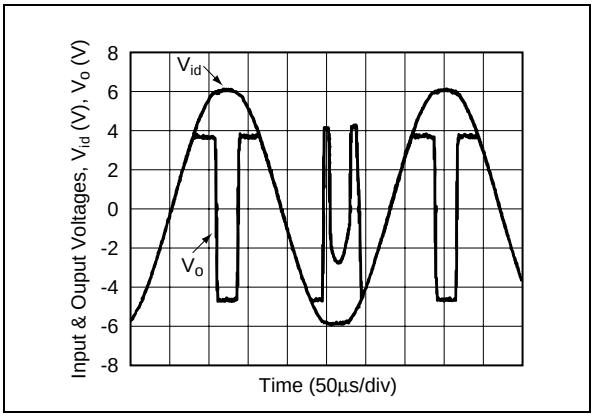

INPUT OFFSET VOLTAGE DRIFT VERSUS TEMPERATURE

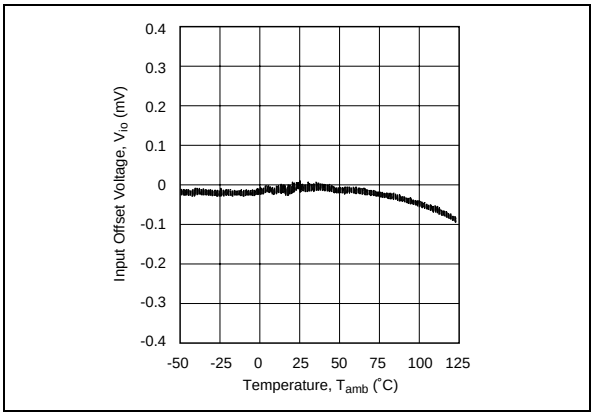

SUPPLY CURRENT VERSUS SUPPLY VOLTAGE (BOTH OP-AMPS)

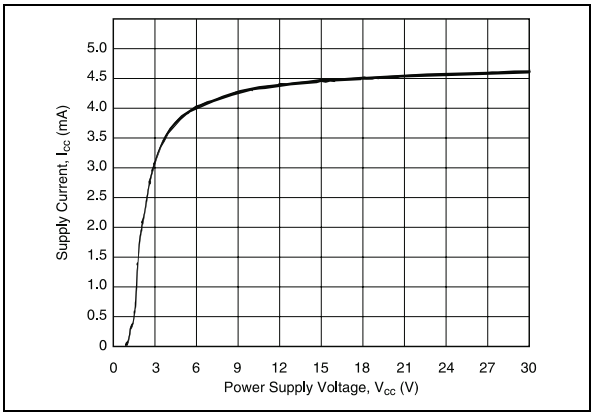

SINK CURRENT

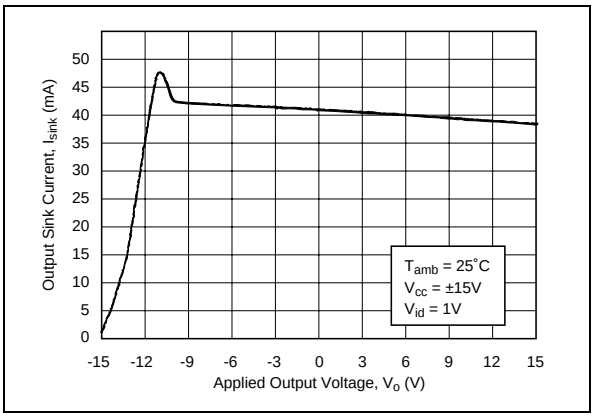

SOURCE CURRENT

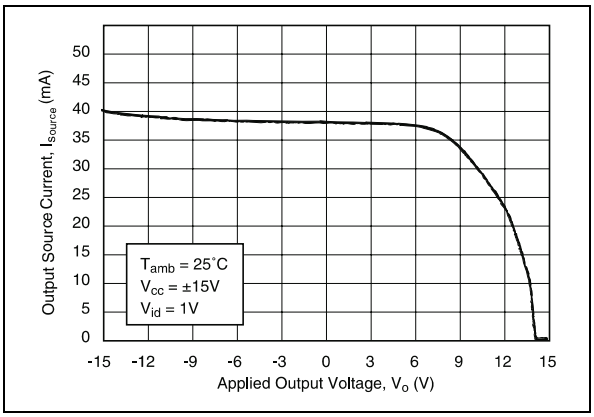

SLEW RATE @ 30V

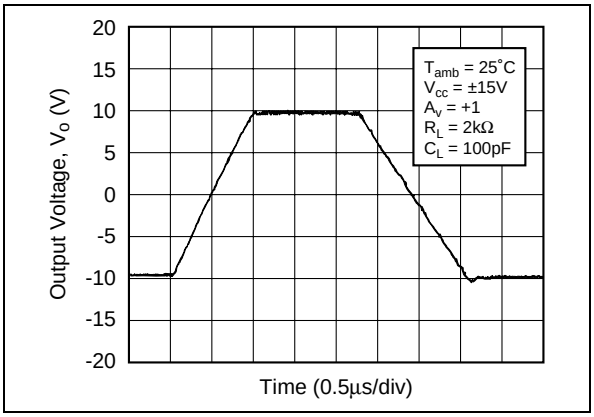

SLEW RATE @ 3V

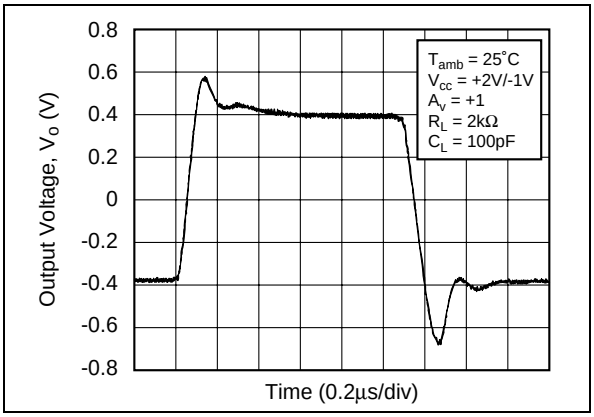

LARGE SIGNAL VOLTAGE GAIN @NO LOAD

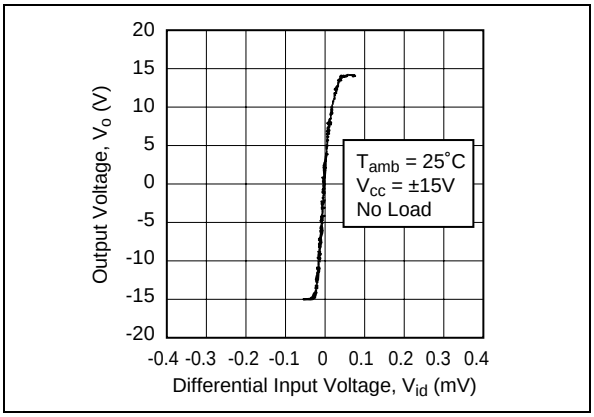

LARGE SIGNAL VOLTAGE GAIN @ LOAD

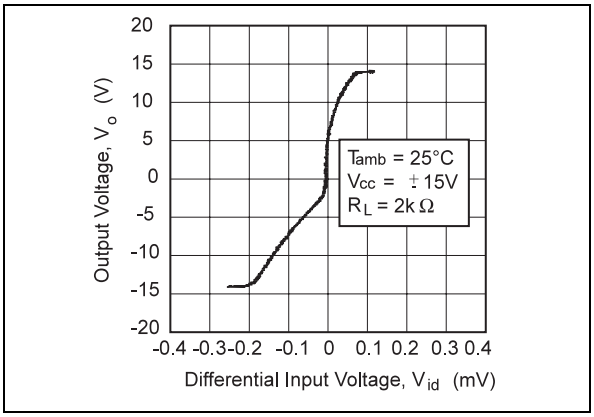

SMALL SIGNAL RESPONSE @ 30V

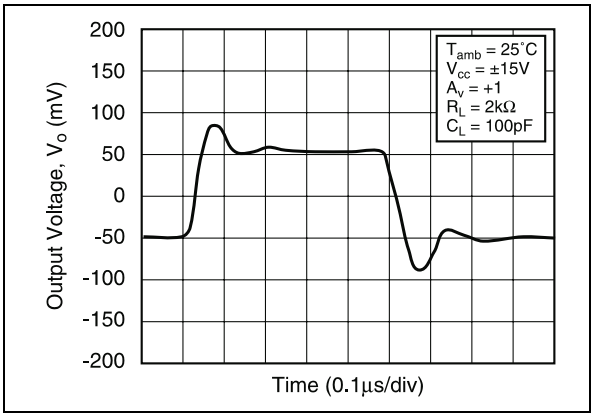

SMALL SIGNAL RESPONSE @ 3V

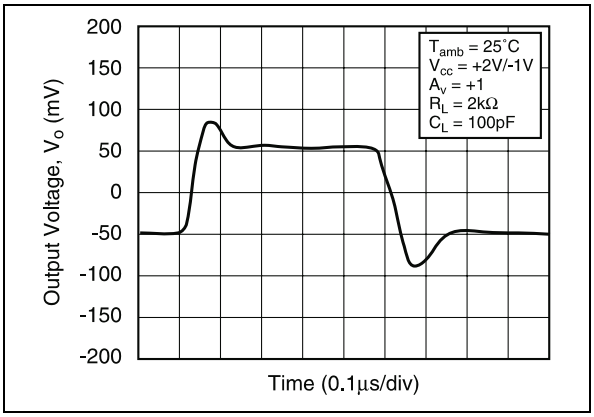

UNITY GAIN BANDWITH @ 30V

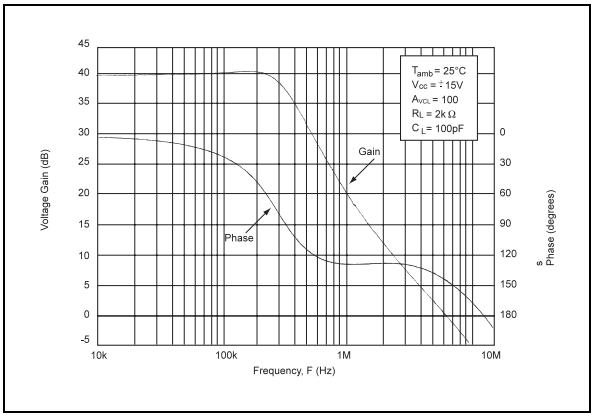

UNITY GAIN BANDWITH @ 3V

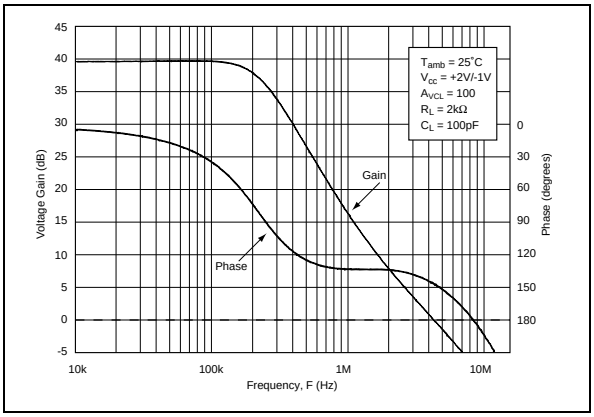

CLOSED LOOP BANDWITH @ 30V

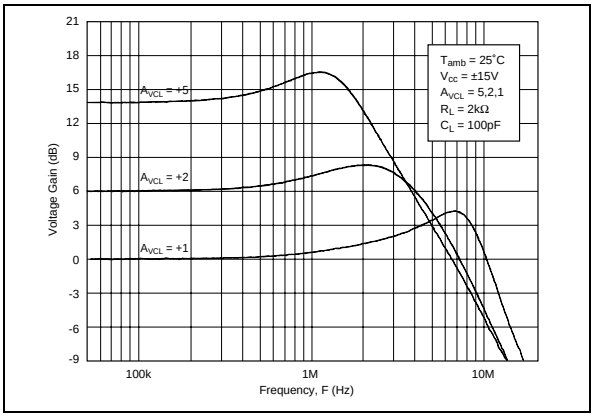

CLOSED LOOP BANDWITH @ 3V

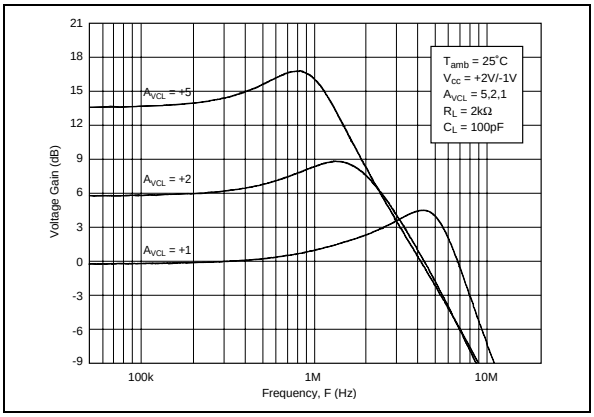

PACKAGE MECHANICAL DATA
8 PINS - PLASTIC DIP

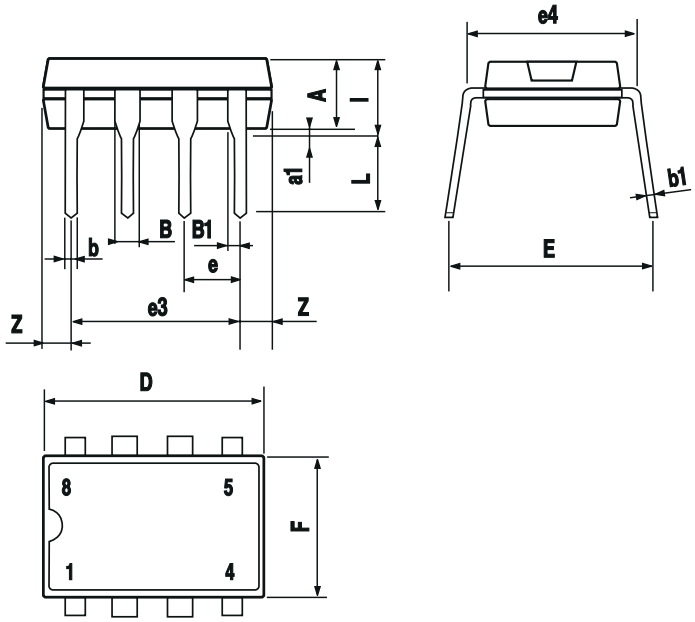

Dim.	Millimeters			Inches		
	Min.	Typ.	Max.	Min.	Typ.	Max.
A		3.32			0.131	
a1	0.51			0.020		
B	1.15		1.65	0.045		0.065
b	0.356		0.55	0.014		0.022
b1	0.204		0.304	0.008		0.012
D			10.92			0.430
E	7.95		9.75	0.313		0.384
e		2.54			0.100	
e3		7.62			0.300	
e4		7.62			0.300	
F			6.6			0260
i			5.08			0.200
L	3.18		3.81	0.125		0.150
Z			1.52			0.060

PACKAGE MECHANICAL DATA

8 PINS - PLASTIC MICROPACKAGE (SO)

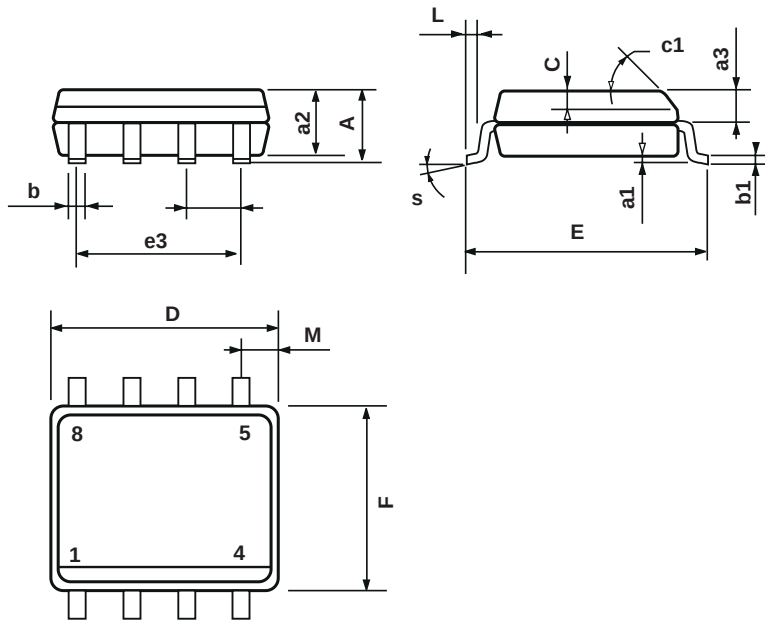

Dim.	Millimeters			Inches		
	Min.	Typ.	Max.	Min.	Typ.	Max.
A			1.75			0.069
a1	0.1		0.25	0.004		0.010
a2			1.65			0.065
a3	0.65		0.85	0.026		0.033
b	0.35		0.48	0.014		0.019
b1	0.19		0.25	0.007		0.010
C	0.25		0.5	0.010		0.020
c1	45° (typ.)					
D	4.8		5.0	0.189		0.197
E	5.8		6.2	0.228		0.244
e		1.27			0.050	
e3		3.81			0.150	
F	3.8		4.0	0.150		0.157
L	0.4		1.27	0.016		0.050
M			0.6			0.024
S	8° (max.)					

Information furnished is believed to be accurate and reliable. However, STMicroelectronics assumes no responsibility for the consequences of use of such information nor for any infringement of patents or other rights of third parties which may result from its use. No license is granted by implication or otherwise under any patent or patent rights of STMicroelectronics. Specifications mentioned in this publication are subject to change without notice. This publication supersedes and replaces all information previously supplied. STMicroelectronics products are not authorized for use as critical components in life support devices or systems without express written approval of STMicroelectronics.

© The ST logo is a registered trademark of STMicroelectronics

© 2001 STMicroelectronics - Printed in Italy - All Rights Reserved
STMicroelectronics GROUP OF COMPANIES
Australia - Brazil - Canada - China - Finland - France - Germany - Hong Kong - India - Israel - Italy - Japan - Malaysia
Malta - Morocco - Singapore - Spain - Sweden - Switzerland - United Kingdom - United States
© http://www.st.com